# CHRISTIE

## Solaria™ Series

# CP2230 Interconnect Drawing

**NOTE:** *All part numbers subject to change*

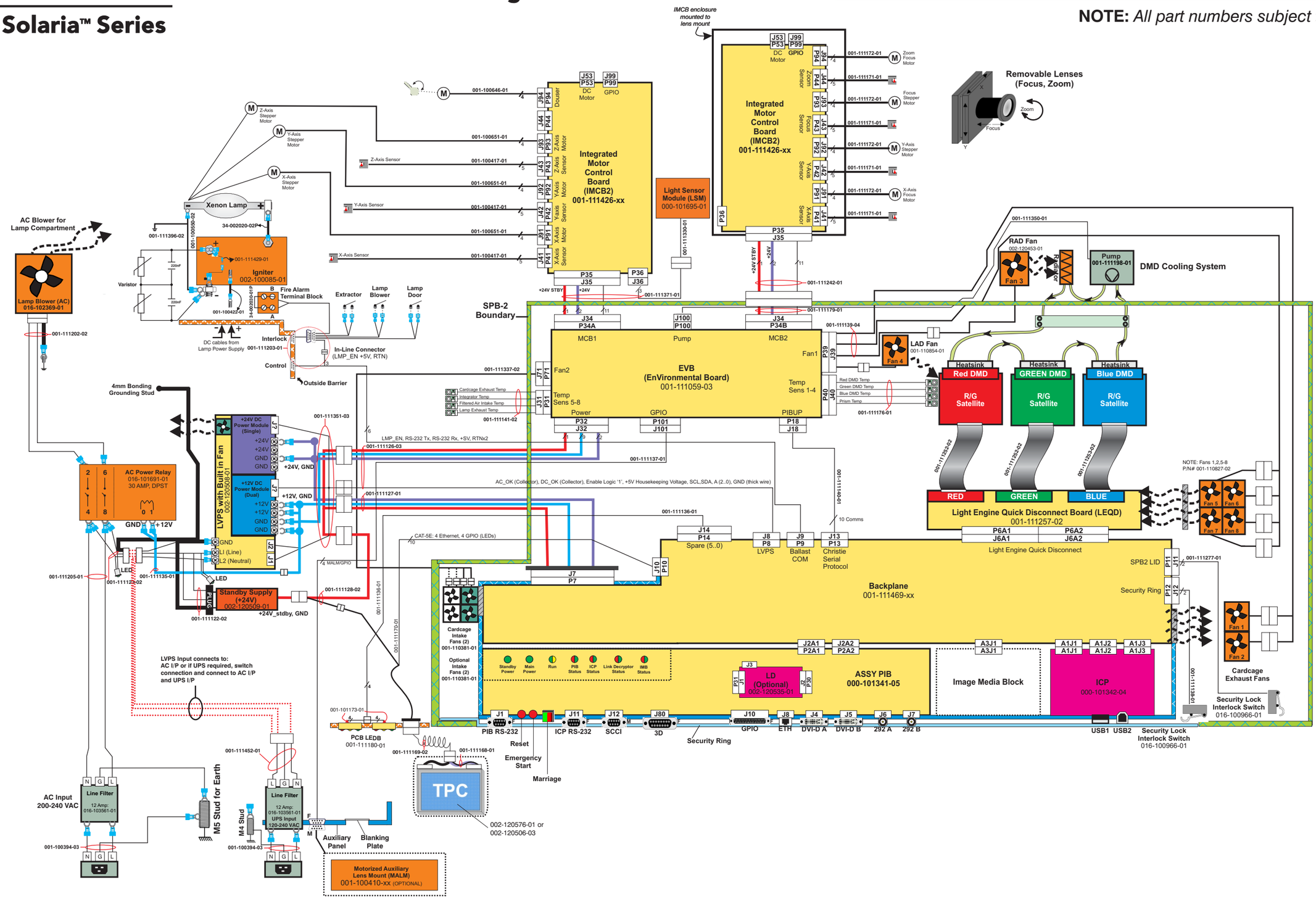

# CP2230 Interconnect Drawing
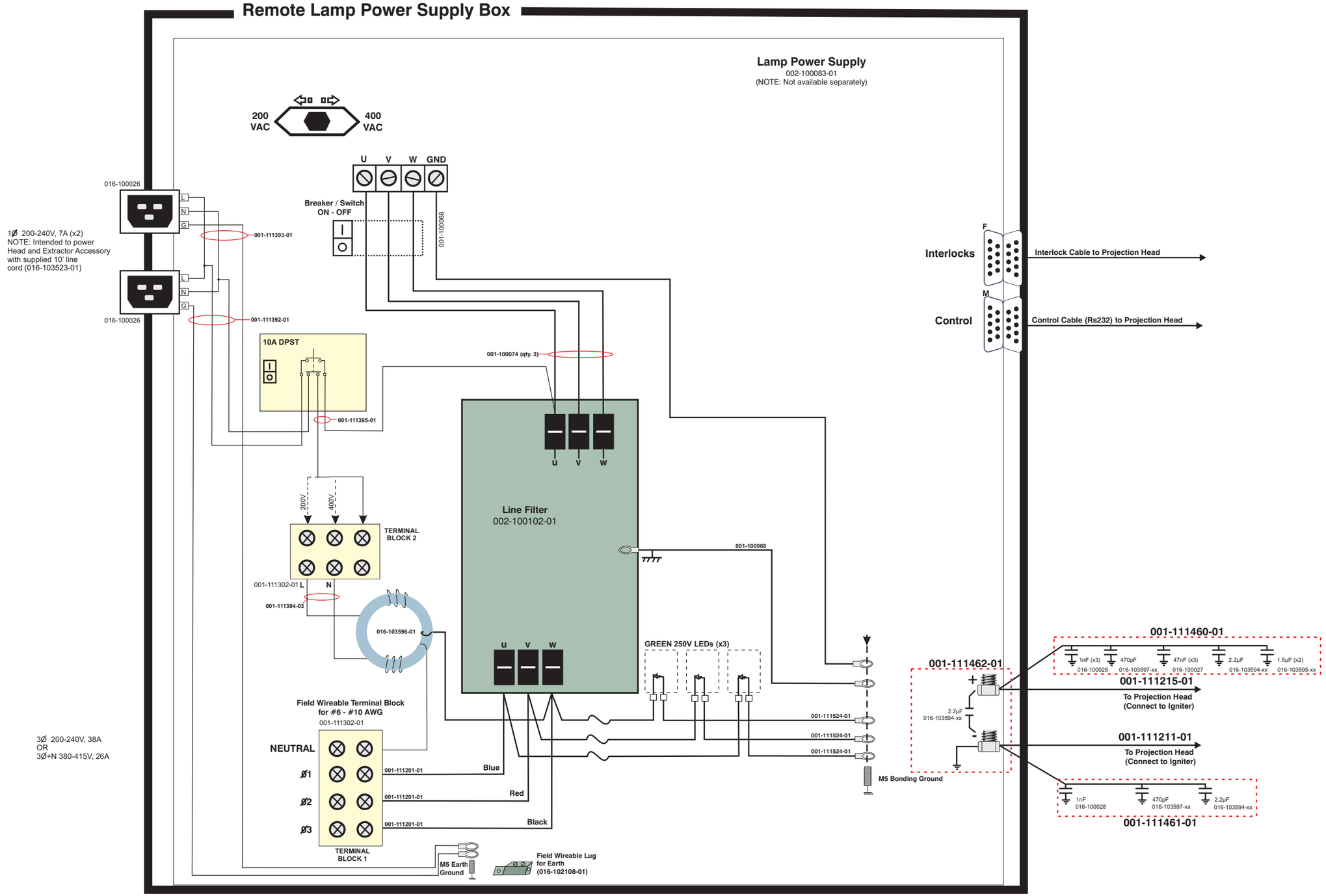
**NOTE:** *All part numbers subject to change*